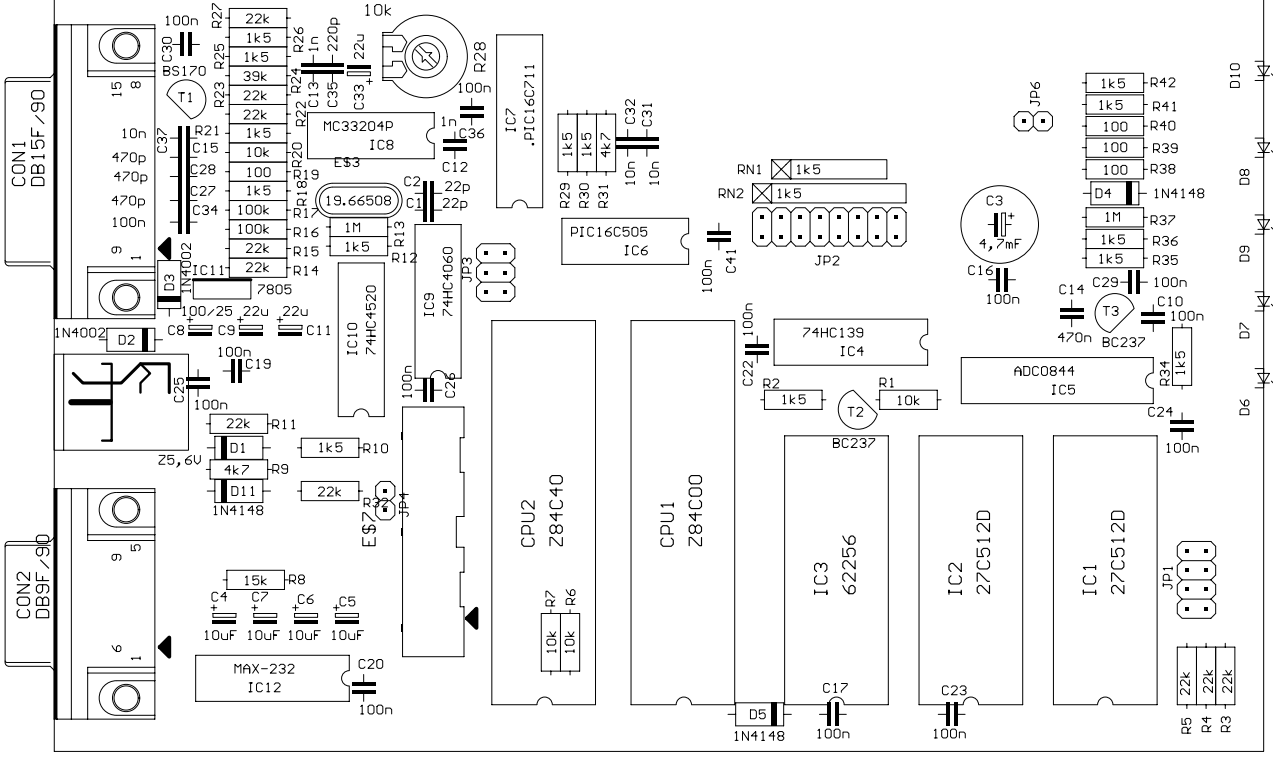
CON1
DB15F/90
CON2
DB9F/90
BS170
T1
D3
1N4002
IC11
7805
D2
1N4002
Z5,6V
D1
D11
1N4148
R11
R10
R9
R8
15k
MAX-232
IC12
C20
100n
C4
C7
C6
C5
10uF
C8
C9
C11
C19
C25
C26
C30
C37
C15
C28
C27
C34
C13
C35
C33
C36
C12
C2
C1
22p
R27
R25
R23
R21
R26
R24
R22
R20
R19
R18
R17
R16
R15
R14
R13
R12
22k
1k5
39k
10k
100
100k
1M
R28
10k
IC8
MC33204P
E$3
19.66508
IC10
74HC4520
IC9
74HC4060
JP3
JP4
E$7
CPU2
Z84C40
R7
R6
CPU1
Z84C00
IC7
.PIC16C711
R29
R30
R31
C32
C31
PIC16C505
IC6
C41
RN1
RN2
JP2
JP6
C3
4,7mF
C16
C14
470n
T3
BC237
C29
C10
R42
R41
R40
R39
R38
D4
1N4148
R37
R36
R35
R34
74HC139
IC4
C22
R2
R1
T2
BC237
ADC0844
IC5
C24
IC3
62256
IC2
27C512D
IC1
27C512D
D5
1N4148
C17
C23
JP1
R5
R4
R3
D10
D8
D9
D7
D6